KOMATSU®

WA200-6

WA
200

MÃ LỰC

Gross: 95.2 kW 128 HP / 2000 vòng/phút

Net: 94 kW 126 HP / 2000 vòng/phút

TRỌNG LƯỢNG VẬN HÀNH

9635 – 10250 kg

DUNG TÍCH GẦU

1.6 – 2.4 m^3

Hình trên đã bao gồm các trang bị tùy chọn.

SPECIFICATIONS

ENGINE

Model . . . . . Komatsu SAA4D107E-1
Type. . . . . .Water-cooled, 4-cycle
Aspiration . . . . . Turbocharged, aftercooled
Number of cylinders 4
Bore x stroke. . . . . 107 mm x 124 mm
Piston displacement . . . . . .4.46 L
Governor . . . . . All-speed, electronic
Horsepower
SAE J1995 . . . . . Gross 95.2 kW 128 HP
ISO 9249/SAE J1349* . . . . . .Net 94 kW 126 HP
Rated rpm. . . . . 2000 min^{-1}
Fan drive method for radiator cooling . . . . . Hydraulic
Fuel system . . . . . .Direct injection
Lubrication system:
Method . . . . . Gear pump, force-lubrication
Filter . . . . . Full-flow type
Air cleaner . . . . . Dry type with double elements and dust evacuator, plus dust indicator

* Net horsepower at the maximum speed of radiator cooling fan is 91 kW 122 HP.
U.S. EPA Tier 3 and EU Stage 3A emissions certified.

TRANSMISSION

Transmission:
Type . . . . Hydrostatic, 1 pump, 2 motors with speed range select
Travel speed:
Measured with 17.5-25 tires

	1st	2nd	3rd	4th
Both Forward and Reverse	4.0 - 13.0 km/h	13.0 km/h	20.0 km/h	34.5 km/h

Measured with 20.5-25 tires

	1st	2nd	3rd	4th
Both Forward and Reverse	4.4 - 14.3 km/h	14.3 km/h	22.0 km/h	38.0 km/h

AXLES AND FINAL DRIVES

Drive system . . . . . Four-wheel drive
Front . . . . . .Fixed, semi-floating
Rear. . . . . .Center-pin support, semi-floating, 24° total oscillation
Reduction gear . . . . . Spiral bevel gear
Differential gear . . . . . .Torque proportioning
Final reduction gear . . . . . Planetary gear, single reduction

BRAKES

Service brakes. . . . . Hydraulically actuated, wet multiple-disc brakes actuate on four wheels
Parking brake . . . .Wet, multiple-disc brake on transfer output shaft
Secondary brake. . . . . Parking brake is commonly used

STEERING SYSTEM

Type. . . . . Full-hydraulic power steering
Steering angle . . . . . .38° each direction (40° end stop)
Minimum turning radius at the center of outside tire . . . . . 5100 mm

HYDRAULIC SYSTEM

Steering system:
Hydraulic pump . . . . . Gear type pump
Capacity . . . . . 85 L/min at rated rpm
Relief valve setting . . . . . .20.6 MPa 210 kgf/cm^2
Hydraulic cylinders:
Type . . . . . Double-acting, piston type
Number of cylinders. 2
Bore x stroke . . . . . 70 mm x 453 mm
Loader control:
Hydraulic pump . . . . . Gear type pump
Capacity . . . . . .54 L/min
Relief valve setting . . . . . .20.6 MPa 210 kgf/cm^2
Hydraulic cylinders:
Type . . . . . Double-acting, piston type
Number of cylinders-bore x stroke:
Lift cylinder. . . . . .2- 120 mm x 673.5 mm
Bucket cylinder . . . . . 1- 130 mm x 493 mm
Control valve. . . . . 2-spool type
Control positions:
Boom . . . . . Raise, hold, lower, and float
Bucket . . . . . .Tilt-back, hold, and dump
Hydraulic cycle time (Rated load in bucket)
Raise. . . . . .5.9 s
Dump . . . . . .1.4 s
Lower (Empty) . . . . . .3.6 s

SERVICE REFILL CAPACITIES

Cooling system . . . . . 17 L
Fuel tank . . . . . 177 L
Engine . . . . . .15.5 L
Hydraulic system. . . . . 58 L
Axle (Each front and rear) . . . . . 18 L
Torque converter and transmission . . . . . 5 L

DIMENSIONS

Measured with 17.5-25-12PR (L-3) tires

		Standard Boom				
		Stockpile Bucket		Excavating Bucket		Light Material Bucket
		B.O.C.*2	Teeth	B.O.C.*2	Teeth	B.O.C.*2
Bucket Capacity:	**Heaped**	2.0 m^3	1.9 m^3	1.7 m^3	1.6 m^3	2.4 m^3
	Struck	1.7 m^3	1.6 m^3	1.4 m^3	1.3 m^3	2.0 m^3
Bucket Width		2550 mm	2565 mm	2550 mm	2565 mm	2550 mm
Bucket Weight		785 kg	730 kg	740 kg	685 kg	875 kg
Dumping Clearance, Max. Height and 45° Dump Angle*1		2760 mm	2670 mm	2815 mm	2730 mm	2655 mm
Reach at Max. Height and 45° Dump Angle*1		1000 mm	1075 mm	945 mm	1015 mm	1105 mm
Reach at 2130 mm Clearance and 45° Dump Angle		1480 mm	1505 mm	1455 mm	1480 mm	1530 mm
Reach with Arm Horizontal and Bucket Level		2215 mm	2330 mm	2135 mm	2245 mm	2365 mm
Operating Height (Fully Raised)		4885 mm	4885 mm	4765 mm	4765 mm	4995 mm
Overall Length		6895 mm	7010 mm	6815 mm	6930 mm	7045 mm
Loader Clearance Circle (Bucket at Carry, Outside Corner of Bucket)		11700 mm	11780 mm	11660 mm	11740 mm	11780 mm
Digging Depth:	**0°**	140 mm	150 mm	140 mm	150 mm	140 mm
	10°	320 mm	350 mm	305 mm	335 mm	345 mm
Static Tipping Load:	**Straight**	8735 kg	8785 kg	8795 kg	8830 kg	8585 kg
	40° Full Turn	7515 kg	7555 kg	7575 kg	7595 kg	7365 kg
Breakout Force		9500 kg	8465 kg	10450 kg	9245 kg	8300 kg
Operating Weight		9735 kg	9680 kg	9690 kg	9635 kg	9820 kg

		High Lift Boom	
		Excavating Bucket	
		B.O.C.*2	Teeth
Bucket Capacity:	**Heaped**	1.7 m^3	1.6 m^3
	Struck	1.4 m^3	1.3 m^3
Bucket Width		2550 mm	2565 mm
Bucket Weight		740 kg	685 kg
Dumping Clearance, Max. Height and 45° Dump Angle*1		3410 mm	3325 mm
Reach at Max. Height and 45° Dump Angle*1		1035 mm	1110 mm
Reach at 2130 mm Clearance and 45° Dump Angle		2020 mm	2055 mm
Reach with Arm Horizontal and Bucket Level		2650 mm	2760 mm
Operating Height (Fully Raised)		5360 mm	5360 mm
Overall Length		7465 mm	7580 mm
Loader Clearance Circle (Bucket at Carry, Outside Corner of Bucket)		12220 mm	12310 mm
Digging Depth:	**0°**	270 mm	280 mm
	10°	435 mm	465 mm
Static Tipping Load:	**Straight**	6960 kg	7030 kg
	40° Full Turn	5985 kg	6045 kg
Breakout Force		9545 kg	8445 kg
Operating Weight		10250 kg	10195 kg

*1 At the end of tooth or Bolt on Cutting Edge (B.O.C.).
All dimensions, weights, and performance values based on SAE J732c and J742b standards.
Static tipping load and operating weight shown include lubricant, coolant, full fuel tank, ROPS cab, and operator. Machine stability and operating weight affected by counterweight, tire size, and other attachments.
Apply the following weight changes to operating weight and static tipping load.

*2 Bolt on Cutting Edges

BUCKET SELECTION GUIDE

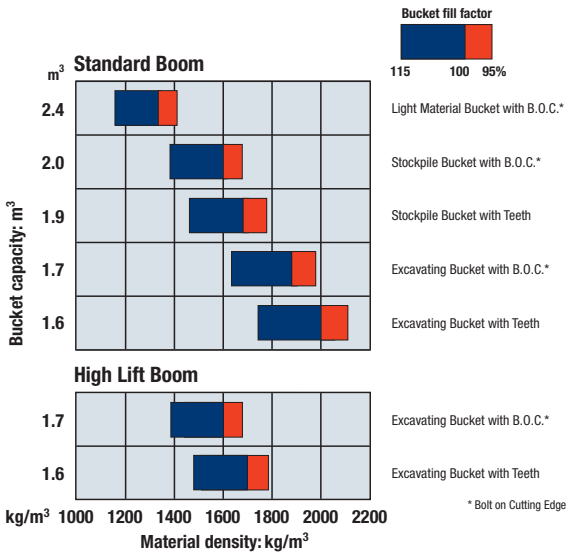

DIMENSIONS

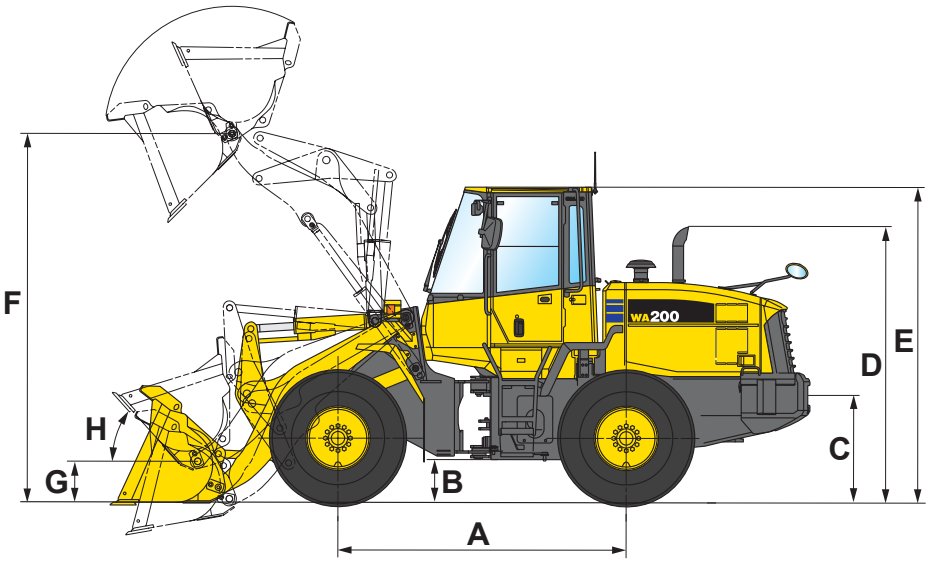

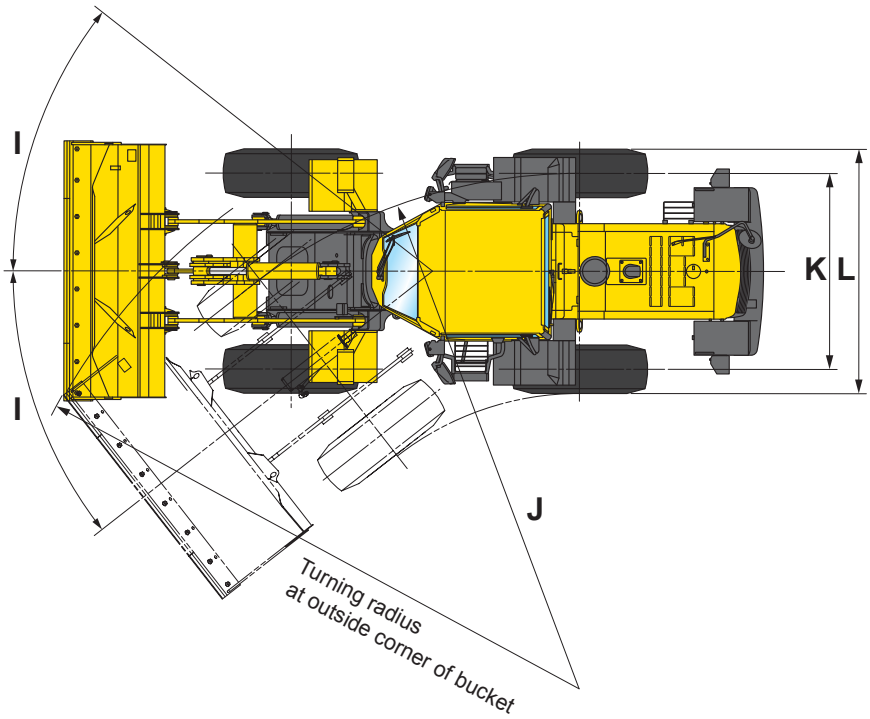

Measured with 17.5-25-12PR (L-3) tires

		Standard Boom	High Lift Boom
A	Wheelbase	2840 mm	
B	Ground clearance	425 mm	
C	Hitch height	870 mm	
D	Overall height, top of stack	2725 mm	
E	Overall height, top of ROPS cab	3110 mm	
F	Hinge pin height, max. height	3635 mm	4320 mm
G	Hinge pin height, carry position	410 mm	600 mm
H	Max. tilt back angle, carry position	48°	50°
I	Steering angle, each direction	38°	
J	Turning radius, center of outside tire	5100 mm	
K	Tread	1930 mm	
L	Width over tires	2375 mm	

BUCKETS & ATTACHMENTS

Buckets

Type	Feature	Image
Stockpile Bucket	This bucket is used for loading stockpile products, such as crushed rock and construction materials.	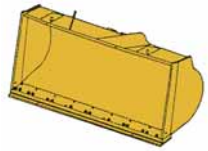
Excavating Bucket	This bucket is used for excavating and loading blasted rock on rock crushing job sites, or for excavating natural ground. It has a flat-blade, straight cutting edge, and provides superior rigidity and wear resistance.	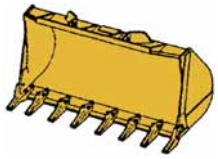
Loose/Light Material Bucket	This bucket is used for loading materials with comparatively light specific gravity. It is based on the stockpile bucket, with a lengthened cutting edge and width to give increased capacity.	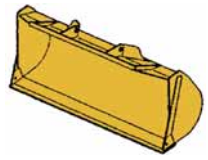

Cutting Edges and Teeth

Type	Feature	Image
Cutting Edges	This edge is made for use in loading loose sand and soil, or for loading stockpiled materials. It is bolted to the leading edge of stockpile buckets and may be detached and reversed. The cutting edges are manufactured from especially heat treated, high tension steel, and since they are reversible, both edges can be used. This effectively doubles their working life.	Bolt on Cutting Edges (B.O.C.) 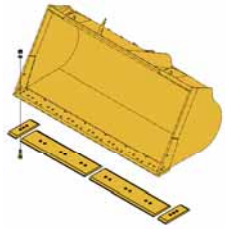
Teeth (Bolt on Type)	These teeth are suitable for loading or excavation of piles of earth or sand, blasted rock, and jobs in the field that involve digging into the side of slopes. The special heat treated, tensile strength steel alloy used in their production assures that they will wear and have a long service life.	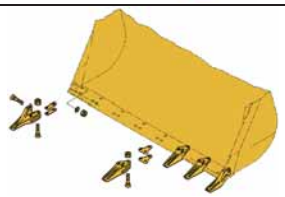

WEIGHT / DIMENSIONS

Tires/Attachments	Change in Operating Weight	Change in Tipping Load Straight	Change in Tipping Load Full Turn	Width Over Tires	Ground Clearance	Change in Vertical Dimensions
17.5-25-12PR (L-3)	0 kg	0 kg	0 kg	2375 mm	425 mm	0 mm
17.5-25-12PR (L-2)	-105 kg	-80 kg	-70 kg	2375 mm	425 mm	0 mm
20.5-25-12PR (L-3)	480 kg	365 kg	320 kg	2470 mm	495 mm	70 mm
20.5-25-12PR (L-2)	295 kg	225 kg	200 kg	2470 mm	495 mm	70 mm
Install ROPS (ISO 3471) **Canopy** (Instead of Cab)	-255 kg	-230 kg	-200 kg			
Install Additional Counterweight	195 kg	510 kg	440 kg			

STANDARD EQUIPMENT

ENGINE/POWER TRAIN:
- Engine, Komatsu SAA4D107E-1 diesel
- Engine shut-off system, electric
- Fuel pre-filter with water separator
- Service brakes, wet multiple-disc type
- Transmission (Hydrostatic with speed range select), automatic
- Wet disc parking brake

ELECTRICAL SYSTEM:
- Alternator, 60 A
- Back-up alarm
- Batteries, 2 x 12 V/88 Ah
- Lights
  4 front, 2 rear
  Back up
  Turn signal with hazard
- Starting motor, 24 V/4.5 kW

HYDRAULIC SYSTEM:
- 2-spool valve for boom and bucket controls
- Hydraulic driven fan with reverse rotation
- Hydraulic oil cooler
- Lift cylinders and bucket cylinder

CAB:
- Air conditioner
- Auto shift transmission with mode select system
- Cigarette lighter (24 V) and ashtray
- Floor mat
- Front & rear window washer and wiper
- Main monitor panel with Equipment Management Monitoring System
- PPC hydraulic control, mono lever
- Rear heated glass (Electric)
- Rear under view mirror
- Rear view mirror for cab
- ROPS/FOPS (ISO 3471/ISO 3449) cab
- Seat, rigid type with reclining
- Seat belt
- Steering wheel, tiltable
- Sun visor

WORK EQUIPMENT:
- Bucket positioner
- Counterweight
- Loader linkage with standard lift boom

OTHER EQUIPMENT:
- Radiator mask, lattice type
- Tires (17.5-25-12PR, L-3 tubeless)

OPTIONAL EQUIPMENT

ENGINE/POWER TRAIN:
- Engine pre-cleaner with extension
- Limited slip differential (Front & rear)
- Power train guard

ELECTRICAL SYSTEM:
- 12 V outlet
- Battery disconnect switch

HYDRAULIC SYSTEM:
- 3-spool valve
- Hydraulic driven fan with automatic reverse rotation
- Secondary steering (SAE)

CAB:
- AM/FM radio
- AM/FM stereo radio cassette
- Cool & heater box
- Deluxe suspension seat
- ROPS (ISO 3471) canopy

WORK EQUIPMENT:
- Additional counterweight
- Bolt on Cutting Edges (B.O.C.)
- Boom kick-out
- Bucket teeth (Bolt-on type)
- High lift boom

OTHER EQUIPMENT:
- Electronically Controlled Suspension System
- Fire extinguisher
- Front fenders
- Ordinary spare parts
- Rear full fenders
- Rear view monitoring system
- Tool kit
- Vandalism protection kit

CÔNG TY TNHH TAM HOÀNG MINH

TAM HOANG MINH
Everyday, on the way to better

VP Chi nhánh: Tổ 44, Kp Vườn Dừa, P Phước Tân, Tp Biên Hoà, Đồng Nai.
Hotline: 0985.048.030
Mail: info@thmh.vn
Website: www.mdx.vn