KOMATSU®

WA320-6

WA
320

MÃ LỰC

Gross: 127 kW 171 HP / 2000 vòng/phút

Net: 125 kW 167 HP / 2000 vòng/phút

TRỌNG LƯỢNG VẬN HÀNH

13705 – 14440 kg

DUNG TÍCH GẦU

2.1 – 3.2 m^3

Hình trên đã bao gồm các trang bị tùy chọn.

SPECIFICATIONS

ENGINE

Model . . . . . Komatsu SAA6D107E-1
Type. . . . . .Water-cooled, 4-cycle
Aspiration . . . . . Turbocharged, aftercooled
Number of cylinders 6
Bore x stroke. . . . . 107 mm x 124 mm
Piston displacement . . . . . .6.69 L
Governor . . . . . All-speed, electronic
Horsepower
SAE J1995 . . . . . .Gross 104 kW 140 HP
ISO 9249/SAE J1349* . . . . . .Net 103 kW 138 HP
Rated rpm. . . . . 2000 min^{-1}
Fan drive method for radiator cooling . . . . . Hydraulic
Fuel system . . . . . .Direct injection
Lubrication system:
Method . . . . . Gear pump, force-lubrication
Filter . . . . . Full-flow type
Air cleaner . . . . . Dry type with double elements and dust evacuator, plus dust indicator

* Net horsepower at the maximum speed of radiator cooling fan is 100 kW 134 HP.
U.S. EPA Tier 3 and EU Stage 3A emissions certified.

TRANSMISSION

Transmission:
Type . . . . Hydrostatic, 1 pump, 2 motors with speed range select
Travel speed:
Measured with 20.5-25 tires

	1st	2nd	3rd	4th
Both Forward and Reverse	4.0 - 13.0 km/h	13.0 km/h	18.0 km/h	38.0 km/h

Measured with 17.5-25 tires

	1st	2nd	3rd	4th
Both Forward and Reverse	3.6 - 11.7 km/h	11.7 km/h	16.2 km/h	34.2 km/h

AXLES AND FINAL DRIVES

Drive system . . . . . Four-wheel drive
Front . . . . . .Fixed, semi-floating
Rear. . . . . .Center-pin support, semi-floating, 24° total oscillation
Reduction gear . . . . . Spiral bevel gear
Differential gear . . . . . .Torque proportioning
Final reduction gear . . . . . Planetary gear, single reduction

BRAKES

Service brakes. . . . . Hydraulically actuated, wet multiple-disc brakes actuate on four wheels
Parking brake . . . .Wet, multiple-disc brake on transfer output shaft
Secondary brake. . . . . Parking brake is commonly used

STEERING SYSTEM

Type. . . . . Full-hydraulic power steering
Steering angle . . . . . .38° each direction (40° end stop)
Minimum turning radius at the center of outside tire . . . . . 5175 mm

HYDRAULIC SYSTEM

Steering system:
Hydraulic pump . . . . . Gear type pump
Capacity . . . . . 110 L/min at rated rpm
Relief valve setting . . . . . .18.6 MPa 190 kgf/cm^2
Hydraulic cylinders:
Type . . . . . Double-acting, piston type
Number of cylinders. 2
Bore x stroke . . . . . 70 mm x 453 mm
Loader control:
Hydraulic pump . . . . . Gear type pump
Capacity . . . . . .78 L/min
Relief valve setting . . . . . .20.6 MPa 210 kgf/cm^2
Hydraulic cylinders:
Type . . . . . Double-acting, piston type
Number of cylinders-bore x stroke:
Lift cylinder. . . . . 2- 130 mm x 717 mm
Bucket cylinder . . . . . 1- 150 mm x 491 mm
Control valve. . . . . 2-spool type
Control positions:
Boom . . . . . Raise, hold, lower, and float
Bucket . . . . . .Tilt-back, hold, and dump
Hydraulic cycle time (Rated load in bucket)
Raise. . . . . .6.3 s
Dump . . . . . .1.7 s
Lower (Empty) . . . . . .3.6 s

SERVICE REFILL CAPACITIES

Cooling system . . . . . 22 L
Fuel tank . . . . . 186 L
Engine . . . . . 23 L
Hydraulic system. . . . . 67 L
Axle (Each front and rear) . . . . . 18 L
Torque converter and transmission . . . . . 5 L

DIMENSIONS

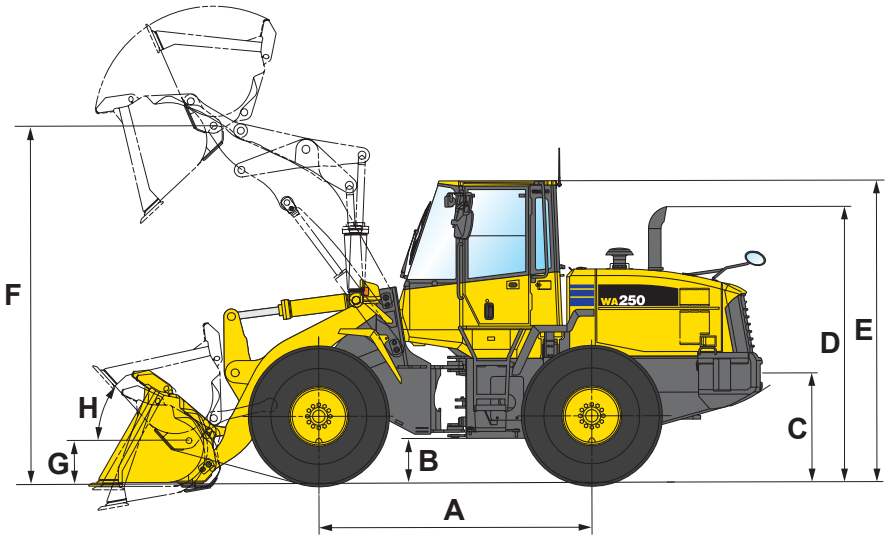

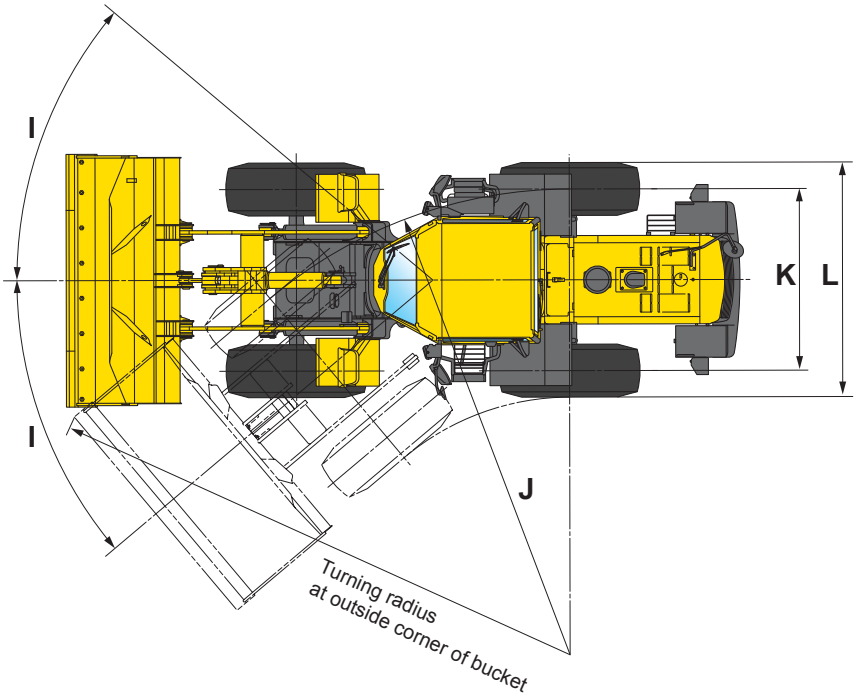

Measured with 20.5-25-12PR (L-3) tires

		Standard Boom	High Lift Boom
A	Wheelbase	2900 mm	
B	Ground clearance	465 mm	
C	Hitch height	950 mm	
D	Overall height, top of stack	2925 mm	
E	Overall height, top of ROPS cab	3200 mm	
F	Hinge pin height, max. height	3795 mm	4390 mm
G	Hinge pin height, carry position	450 mm	615 mm
H	Max. tilt back angle, carry position	48°	50°
I	Steering angle, each direction	38°	
J	Turning radius, center of outside tire	5175 mm	
K	Tread	1930 mm	
L	Width over tires	2470 mm	

DIMENSIONS

Measured with 20.5-25-12PR (L-3) tires

		Standard Boom				
		Stockpile Bucket		Excavating Bucket		Light Material Bucket
		B.O.C.*2	Teeth	B.O.C.*2	Teeth	B.O.C.*2
Bucket Capacity:	**Heaped**	2.3 m^3	2.1 m^3	1.9 m^3	1.8 m^3	2.7 m^3
	Struck	2.0 m^3	1.8 m^3	1.6 m^3	1.5 m^3	2.3 m^3
Bucket Width		2685 mm	2705 mm	2685 mm	2705 mm	2685 mm
Bucket Weight		960 kg	865 kg	905 kg	810 kg	1050 kg
Dumping Clearance, Max. Height and 45° Dump Angle*1		2850 mm	2735 mm	2925 mm	2810 mm	2755 mm
Reach at Max. Height and 45° Dump Angle*1		985 mm	1070 mm	910 mm	995 mm	1080 mm
Reach at 2130 mm Clearance and 45° Dump Angle		1490 mm	1525 mm	1450 mm	1490 mm	1540 mm
Reach with Arm Horizontal and Bucket Level		2230 mm	2370 mm	2125 mm	2265 mm	2360 mm
Operating Height (Fully Raised)		5065 mm	5065 mm	4945 mm	4965 mm	5200 mm
Overall Length		6995 mm	7135 mm	6890 mm	7030 mm	7125 mm
Loader Clearance Circle (Bucket at Carry, Outside Corner of Bucket)		12025 mm	12115 mm	11970 mm	12060 mm	12095 mm
Digging Depth:	**0°**	75 mm	90 mm	75 mm	90 mm	75 mm
	10°	265 mm	305 mm	245 mm	285 mm	285 mm
Static Tipping Load:	**Straight**	11435 kg	11530 kg	11555 kg	11650 kg	11285 kg
	40° Full Turn	10060 kg	10140 kg	10165 kg	10245 kg	9925 kg
Breakout Force		12340 kg	10830 kg	13850 kg	12010 kg	11000 kg
Operating Weight		11395 kg	11300 kg	11340 kg	11245 kg	11485 kg

		High Lift Boom	
		Excavating Bucket	
		B.O.C.*2	Teeth
Bucket Capacity:	**Heaped**	1.9 m^3	1.8 m^3
	Struck	1.6 m^3	1.5 m^3
Bucket Width		2685 mm	2705 mm
Bucket Weight		905 kg	810 kg
Dumping Clearance, Max. Height and 45° Dump Angle*1		3520 mm	3410 mm
Reach at Max. Height and 45° Dump Angle*1		940 mm	1025 mm
Reach at 2130 mm Clearance and 45° Dump Angle		1955 mm	2000 mm
Reach with Arm Horizontal and Bucket Level		2595 mm	2735 mm
Operating Height (Fully Raised)		5540 mm	5560 mm
Overall Length		7495 mm	7635 mm
Loader Clearance Circle (Bucket at Carry, Outside Corner of Bucket)		12475 mm	12575 mm
Digging Depth:	**0°**	80 mm	95 mm
	10°	250 mm	290 mm
Static Tipping Load:	**Straight**	8065 kg	8180 kg
	40° Full Turn	7015 kg	7115 kg
Breakout Force		12715 kg	11025 kg
Operating Weight		11875 kg	11785 kg

*1 At the end of tooth or Bolt on Cutting Edge (B.O.C.).
All dimensions, weights, and performance values based on ISO 7131 and 7546 standards.
Static tipping load and operating weight shown include lubricant, coolant, full fuel tank, ROPS (ISO 3471) cab, air conditioner and operator. Machine stability and operating weight affected by counterweight, tire size, and other attachments.
Apply the following weight changes to operating weight and static tipping load.

*2 Bolt on Cutting Edges

BUCKET SELECTION GUIDE

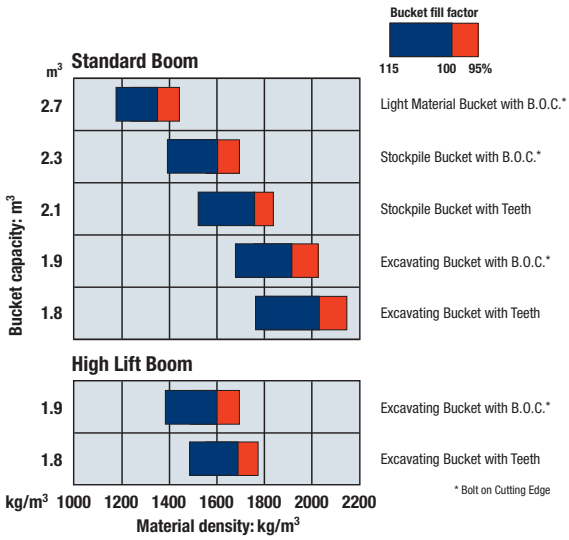

BUCKETS & ATTACHMENTS

Buckets

Type	Feature	Image
Stockpile Bucket	This bucket is used for loading stockpile products, such as crushed rock and construction materials.	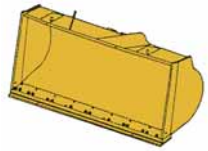
Excavating Bucket	This bucket is used for excavating and loading blasted rock on rock crushing job sites, or for excavating natural ground. It has a flat-blade, straight cutting edge, and provides superior rigidity and wear resistance.	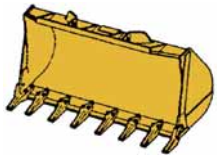
Loose/Light Material Bucket	This bucket is used for loading materials with comparatively light specific gravity. It is based on the stockpile bucket, with a lengthened cutting edge and width to give increased capacity.	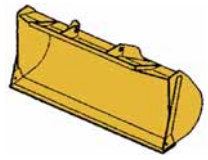

Cutting Edges and Teeth

Type	Feature	Image	
Cutting Edges	This edge is made for use in loading loose sand and soil, or for loading stockpiled materials. It is bolted to the leading edge of stockpile buckets and may be detached and reversed. The cutting edges are manufactured from especially heat treated, high tension steel, and since they are reversible, both edges can be used. This effectively doubles their working life.	Bolt on Cutting Edges (B.O.C.) 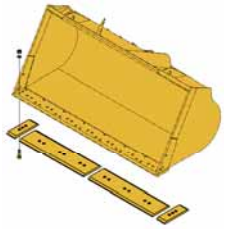	
Teeth (Bolt on Type)	These teeth are suitable for loading or excavation of piles of earth or sand, blasted rock, and jobs in the field that involve digging into the side of slopes. The special heat treated, tensile strength steel alloy used in their production assures that they will wear and have a long service life.	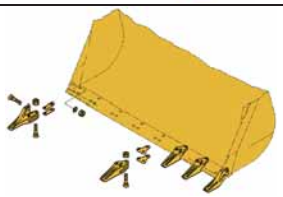	
Teeth (Tip Type)	These teeth tips which are attached to an adapter that is welded or bolted to the bucket edge. This means that an interchangeable part, the tooth tip, absorbs most of the wear and protects the actual bucket edge. They give excellent performance when used to handle blasted rock, piles of earth and similarly heavy duty tasks.	Welded adapter 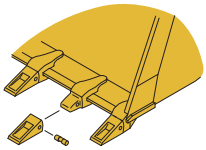	Bolt on adapter 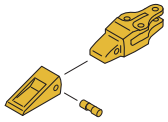

WEIGHT / DIMENSIONS

Tires/Attachments	Change in Operating Weight	Change in Tipping Load Straight	Change in Tipping Load Full Turn	Width Over Tires	Ground Clearance	Change in Vertical Dimensions
20.5-25-12PR (L-3)	0 kg	0 kg	0 kg	2470 mm	465 mm	0 mm
20.5-25-12PR (L-2)	-150 kg	-110 kg	-90 kg	2470 mm	465 mm	0 mm
17.5-25-16PR (L-3)	-375 kg	-280 kg	-245 kg	2375 mm	395 mm	70 mm
Install ROPS(ISO 3471) **Canopy** (Instead of Cab)	-150 kg	-150 kg	-130 kg			
Install Additional Counterweight	300 kg	580 kg	510 kg			

STANDARD EQUIPMENT

ENGINE/POWER TRAIN:
- Engine, Komatsu SAA6D107E-1 diesel
- Engine shut-off system, electric
- Fuel pre-filter with water separator
- Service brakes, wet multiple-disc type
- Transmission (Hydrostatic with speed range select), automatic
- Wet disc parking brake

ELECTRICAL SYSTEM:
- Alternator, 60 A
- Back-up alarm
- Batteries, 2 x 12 V/110 Ah
- Lights
  4 front, 2 rear
  Back up
  Turn signal with hazard
- Starting motor, 24 V/4.5 kW

HYDRAULIC SYSTEM:
- 2-spool valve for boom and bucket controls
- Hydraulic driven fan with reverse rotation
- Hydraulic oil cooler
- Lift cylinders and bucket cylinder

CAB:
- Air conditioner
- Auto shift transmission with mode select system
- Cigarette lighter (24 V) and ashtray
- Floor mat
- Front & rear window washer and wiper
- Main monitor panel with Equipment Management Monitoring System
- PPC hydraulic control, mono lever
- Rear heated glass (Electric)
- Rear under view mirror
- Rear view mirror for cab
- ROPS/FOPS (ISO 3471/ISO 3449) cab
- Seat, rigid type with reclining
- Seat belt
- Steering wheel, tiltable
- Sun visor

WORK EQUIPMENT:
- Bucket positioner
- Counterweight
- Loader linkage with standard lift boom

OTHER EQUIPMENT:
- Radiator mask, lattice type
- Tires (20.5-25-12PR, L-3 tubeless)

OPTIONAL EQUIPMENT

ENGINE/POWER TRAIN:
- Additional fuel filter with water separator
- Engine pre-cleaner with extension
- Limited slip differential (Front & rear)
- Power train guard
- Wide core radiator

ELECTRICAL SYSTEM:
- 12 V outlet
- Batteries, large capacity
- Battery disconnect switch

HYDRAULIC SYSTEM:
- 3-spool valve
- Hydraulic driven fan with automatic reverse rotation
- Secondary steering (SAE)

CAB:
- AM/FM radio
- AM/FM stereo radio cassette
- Cool & heater box
- Deluxe suspension seat
- ROPS (ISO 3471) canopy

WORK EQUIPMENT:
- Additional counterweight
- Bolt on Cutting Edge (B.O.C.)
- Boom kick-out
- Bucket teeth (Bolt-on type)
- Bucket teeth (Tip type)
- High lift boom

OTHER EQUIPMENT:
- Electronically Controlled Suspension System
- Fire extinguisher
- Front fenders
- Ordinary spare parts
- Rear full fenders
- Rear view monitoring system
- Tool kit
- Vandalism protection kit

CÔNG TY TNHH TAM HOÀNG MINH

TAM HOANG MINH
Everyday, on the way to better

VP Chi nhánh: Tổ 44, Kp Vườn Dừa, P Phước Tân, Tp Biên Hoà, Đồng Nai.
Hotline: 0985.048.030
Mail: info@thmh.vn
Website: www.mdx.vn